LiGHT SKY



NEW

MINI LASER AQUA PRO

LASER MOVING BEAM

FEATURES

- MINI LASER AQUA PRO is a premium laser pure-beam moving head meticulously developed by LiGHT SKY for high-end applications.
- It features a high-precision optical system with a 128 mm front aperture, delivering a solid, full beam with sharp edges.
- The modular structural design allows independent module adjustment, easy disassembly, and efficient maintenance.
- With a 1.1° beam angle, it achieves ultra-high brightness of up to 220,000 lx@10m.
- The color system includes 12 colors + 1 blank, can achieve bidirectional color rainbow, color wheel bidirectional rotation, random color mode, linear CMY mixing, one fixed gobo wheel with 17 static gobos, and one independent frost effect.
- Equipped with an 8-facet prism and a 24-facet prism that can be combined, the compact and lightweight fixture with a foldable integrated clamp is ideal for entertainment venues, rental applications, TV studios, music festivals, and exhibition events.

Unit: mm

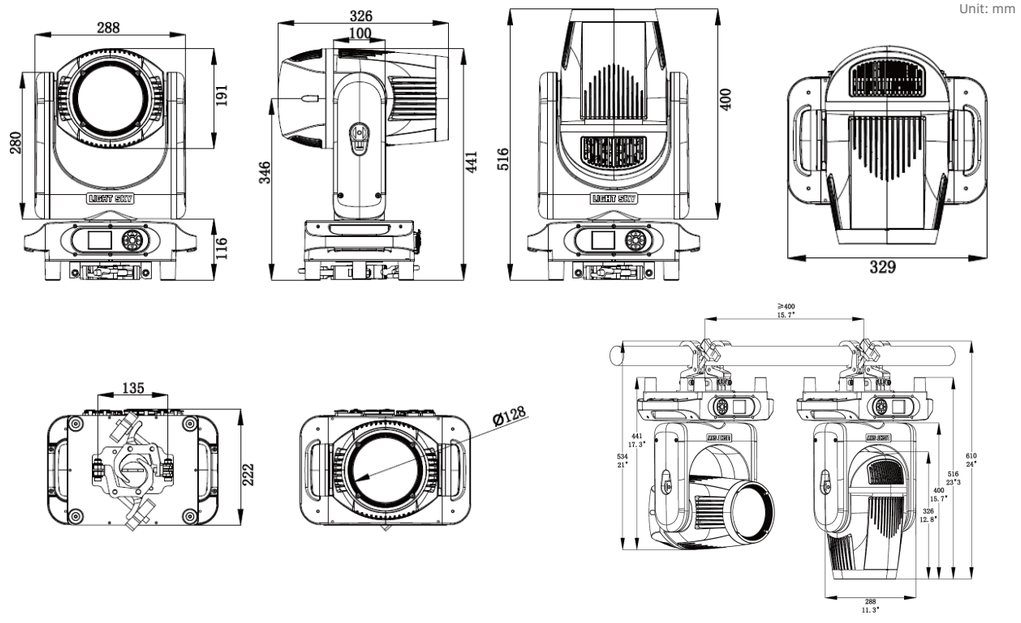

Light source & Optics

- Light Source:120W Laser module
- Beam Angle: 1.1°
- Front Lens : ϕ128mm High Definition Lens
- Colour Temperature Output: 10000 K
- Color Rendering Index (CRI): Ra≥70
- Illuminance: 220,000 lx@10m
- Light Source Theory Life Span: 12,000 h

Color

- Color Wheel: 12 Colors + blank, capable of bi-directional color rainbow effect, bi-color step gradient (linear movement), bi-directional rotating color wheel
- CMY: Linear CMY Color Mixing System

Effects

- Fixed Gobo Wheel: 17 fixed gobo +1 blank,can achieve flowing and shaking effects
- Frost: Independent Frost Effect
- Prism: 8 facet prism+24 facet prism, rotatable in both directions, independently switchable, stackable
- Dimmer: 0 to 100% linear dimmer
- Focus: Motorized focus

Control and Programming

- Control Channels: 17CH, 19CH (see channel chart for details)
- Protocols: DMX512, RDM, Art-Net,sACN
- DMX and RDM connectors: Locking 3 pin or 5 pin XLR IN/OUT
- Display: LCD screen

Software

- Software upgrade via DMX signal.
- Intelligent temperature control to ensure the lifespan of the laser light source.
- Noise level control: High brightness mode, Standard mode, Silent mode

Pan/Tilt Movement

- Pan: 540°, 8-bit / 16-bit precision
- Tilt: 270° , 8-bit / 16-bit precision
- Automatic reset with error correction
- Tilt Lock

Power and Electrical

- Input Voltage Range: AC 100-240V 50/60Hz
- Max Power Consumption: 233W
- Power factor: 0.996
- Maximum current of the fixture: 2.33A/100V; 1.05A/220V

Size and Weight

- Product Dimensions: 329mm × 222mm × 516mm
- Net Weight: 14.3 kg
- Carton Dimensions: 405mm × 295mm × 650mm
- Gross Weight: 18.3 kg

Other

- IP Rate: IP66
- Operating environment: -20℃ ~ 45℃
- Maximum surface temperature: 65℃

Factory Configuration

- Power Cable: 1 pc (Part No.: C1400050050)
- Signal Cable: 1 pc (Part No.: F0200020087)
- Safety Rope: 1 pcs (Part No.: F0200010010)
- Clamp: 1 pc Compatible with tubes of Ø38–52 mm (Part No.: C0499990057)

Optional Accessories/Packaging

- Flycase Part No.: B0101470001
- Flycase Dimensions(4 in 1): 850mm x 690mm x 735mm
- Flycase Gross Weight(4 in 1): 111.9kg

Function Effect

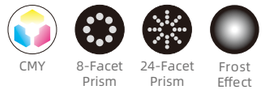

Color Wheel



Illumination diagram

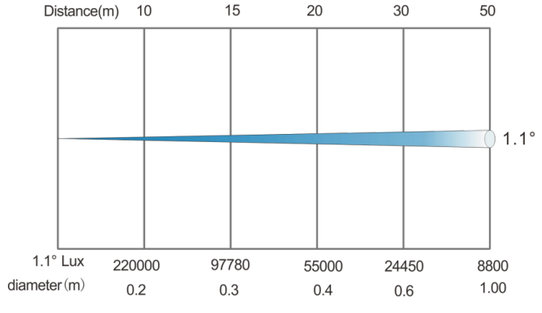

Fixed Gobo Wheel

